XBILITY RC

SET-UP SHEET

NAME	DATE
José Pequito	9/11/25

QUAL POS.	FINAL POS.	LAPS / TIME	BEST LAPTIME
1	2	/	9.0

COMMENTS

Pan Car

TRACK

NAME: 5280racewav

TRACK SURFACE	☐ CARPET	☑ RCP	
TRACK LAYOUT	☐ TECHNICAL	☑ MIXED	☐ FAST
TRACTION	☐ LOW	☐ MEDIUM	☑ HIGH

BODY

MODEL	BUMPER
Nova	Nova 0offset
WING	**BODY TYPE**
Flat	

WEIGHTS

BODY WEIGHT		CAR WEIGHT		TOTAL WEIGHT
grams	+	grams	=	grams

FRONT % WEIGHT DISTRIB. % BACK

CHASSIS

☐ ALUM ☑ RX BRASS WEIGHT ☑ STEEL

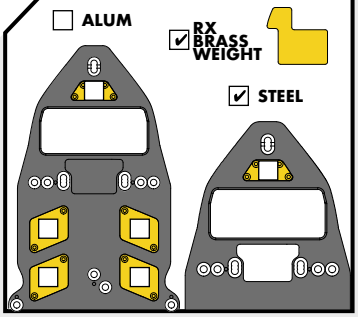

FRONT TOTAL WIDTH: 77 mms

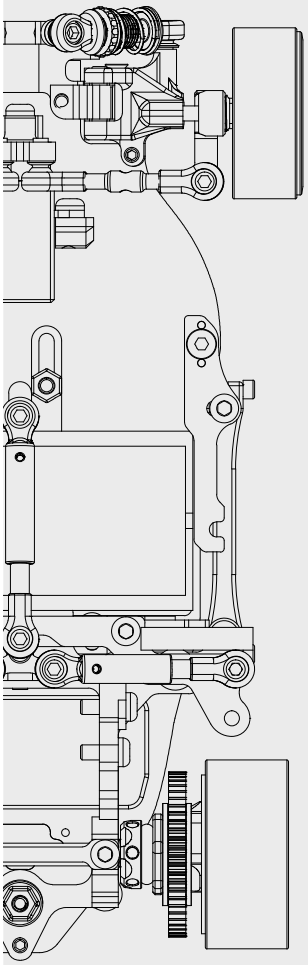

REAR TOTAL WIDTH: 1+1 mms

ELECTRONICS

MOTOR	SERVO
6500	Torq
ESC	**BATTERY**
Team powers	Marka

BATTERY POSITION: ☐ FRONT ☐ CENTER ☐ BACK

COMMENTS: Turbo-15 Boost -0

FRONT

SHIMS: 0 mms

OIL / GREASE: ☑ 10000

CASTER: ☐ 0 ☐ 1.5 ☑ 3 degrees

TOE: 1.5 degrees

AXLE TRAIL: -1 mms

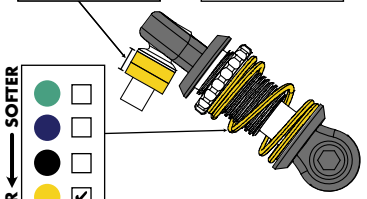

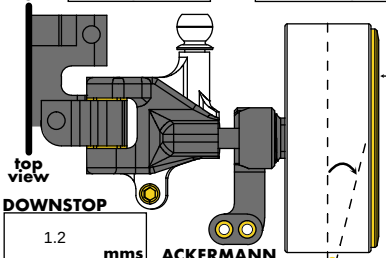

DISCS ☑ SIDE GLUE ☐ NOTHING: 22.4 mms

TYRE DIAMETER: 22.6 mms — Ksk540 model

RIM OFFSET: 0 mms — Reflex model

DOWNSTOP: 1.2 mms

ACKERMANN

STEERING DEGREES: 22 degrees

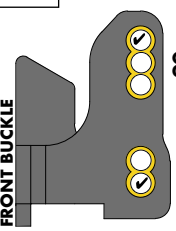

CAMBER: 2 degrees

BUMP STEER: 3 mms

HORN ACKERMANN: 0 mms

HORN TYPE: Original

MID

DAMPER / SHOCK: ☑ 7000

FRONT SHIMS: 0 mms

OIL / GREASE: ☑

BACK SHIMS: 0 mms

PRE-LOAD SHIMS: 0 mms

LINK SHIMS: 3 mms

MOUNT: ☐ front ☐ back

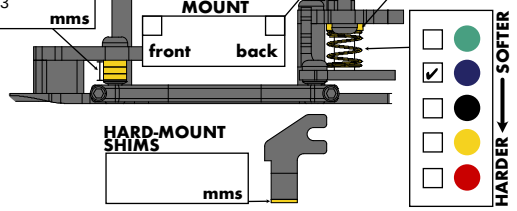

HARD-MOUNT SHIMS: mms

SIDE IN SHIMS: 0 mms

OIL / GREASE: ☑ 10000

SIDE OUT SHIMS: 0 mms

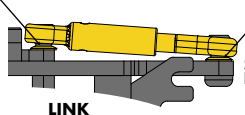

SIDE DAMPERS

LINK POSITION



DAMPER POSITION



PIVOT MOUNTING POSITION

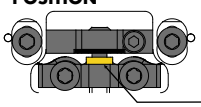

PIVOT SHIM: ☐ 0 ☑ 1 ☐ 2 mms

REAR

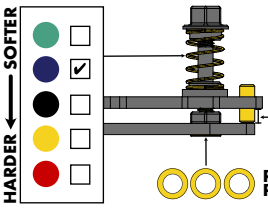

DROOP: 0.2 mms

POD-ANGLE: 0 mms

REAR SCREW POSITION

RIDE HEIGHT ECCENTRIC BUSHINGS

+1	+0,8	+0,6	+0,4	+0,2	0	-0,2	-0,4	-0,6	-0,8	-1
☐	☐	☐	☐	☐	☐	☐	☑	☐	☐	☐

TYRE DIAMETER: 25 mms — 15 Marka model

RIM OFFSET: 11mm+3 mms — Xbility model

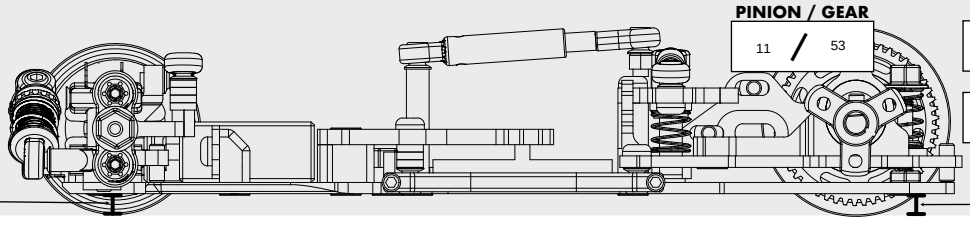

PINION / GEAR: 11 / 53

DIFF TYPE: Original

GREASE:

BALL TYPE: Original

LOCK: ☐ soft ☐ med ☑ hard

FRONT HEIGHT: 1.8 mms

REAR HEIGHT: 1.8 mms