XBILITY RC SET-UP SHEET

NAME	DATE
CASSARO Fabrice	09/11/2025

QUAL POS.	FINAL POS.	LAPS / TIME	BEST LAPTIME
		/	

COMMENTS

TRACK

NAME: 5280 RACE WAY PN2025

TRACK SURFACE	☐ CARPET	● RCP	
TRACK LAYOUT	☐ TECHNICAL	● MIXED	☐ FAST
TRACTION	☐ LOW	☐ MEDIUM	● HIGH

BODY

MODEL	BUMPER
Jomurema	Marka
WING	**BODY TYPE**
PN Carbone	ABS

CHASSIS

● ALUM ☑ RX BRASS WEIGHT ☐ STEEL

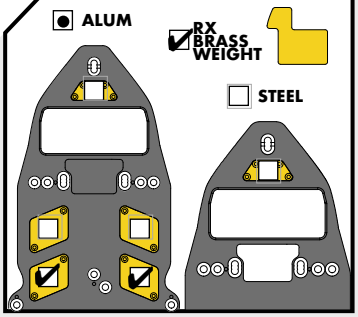

FRONT TOTAL WIDTH: 76 mms

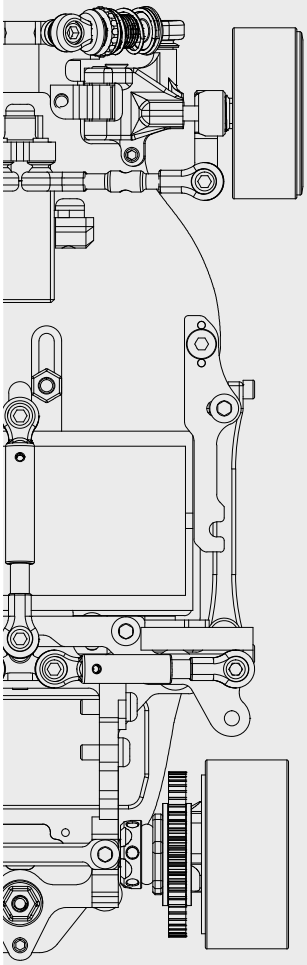

REAR TOTAL WIDTH: 77.50 mms

ELECTRONICS

MOTOR	SERVO
PN 2500	TORO TCM 103
ESC	**BATTERY**
EZ RUN 28	GK Body 450 ma

BATTERY POSITION: ☐ FRONT ● CENTER ☐ BACK

COMMENTS:

WEIGHTS

BODY WEIGHT		CAR WEIGHT		TOTAL WEIGHT
23.6 grams	+	137 grams	=	160.5 grams

FRONT 51 % — WEIGHT DISTRIB. — 49 % BACK

FRONT

SHIMS: 3 mms — OIL / GREASE: 15K — CASTER: ☐ 0 ☐ 1.5 ● 3 degrees — TOE: 2 degrees — AXLE TRAIL: mms

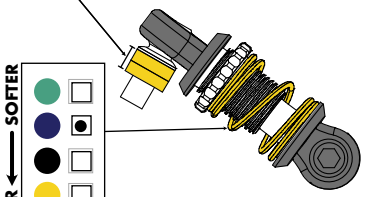

SOFTER / HARDER

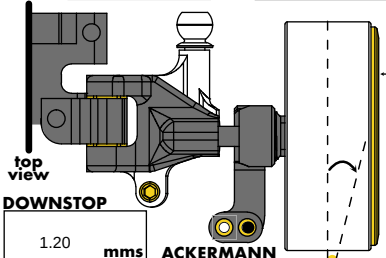

front / top view

DISCS: ● — SIDE GLUE: ☐ — NOTHING: ☐ — 22.2 mms

TYRE DIAMETER: 22 mms — ksk540 model

RIM OFFSET: 0 mms — REFLEX model

DOWNSTOP: 1.20 mms

ACKERMANN

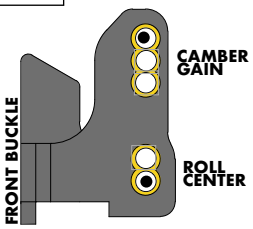

FRONT BUCKLE — CAMBER GAIN — ROLL CENTER

CAMBER: 1.5 degrees

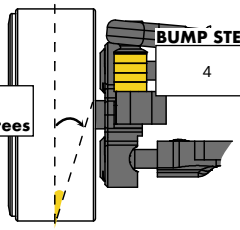

BUMP STEER: 4 mms

STEERING DEGREES: degrees

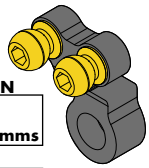

HORN ACKERMANN: 0 mms

HORN TYPE: Standard

MID

DAMPER / SHOCK: ●

FRONT SHIMS: 0 mms — OIL / GREASE: 10K — BACK SHIMS: 0 mms

PRE-LOAD SHIMS: 0 mms

LINK SHIMS: 3 mms

MOUNT: ● front ☐ back

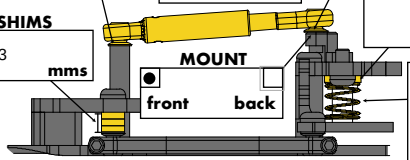

SOFTER / HARDER

HARD-MOUNT SHIMS: mms

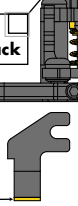

SIDE IN SHIMS: 0 mms — OIL / GREASE: 15K — SIDE OUT SHIMS: 0 mms

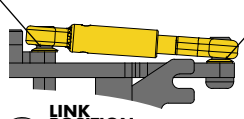

SIDE DAMPERS

LINK POSITION



DAMPER POSITION



PIVOT MOUNTING POSITION

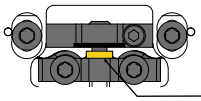

PIVOT SHIM: ☐ 0 ● 1 ☐ 2 mms

REAR

SOFTER / HARDER

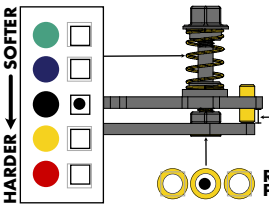

DROOP: 0.4 mms

POD-ANGLE: 2 mms

REAR SCREW POSITION

RIDE HEIGHT ECCENTRIC BUSHINGS

+1	+0,8	+0,6	+0,4	+0,2	0	-0,2	-0,4	-0,6	-0,8	-1
☐	☐	☐	☐	☐	●	☐	☐	☐	☐	☐

TYRE DIAMETER: 25 mms — Marka RR20 model

RIM OFFSET: 11 +3 mms — Xbility model

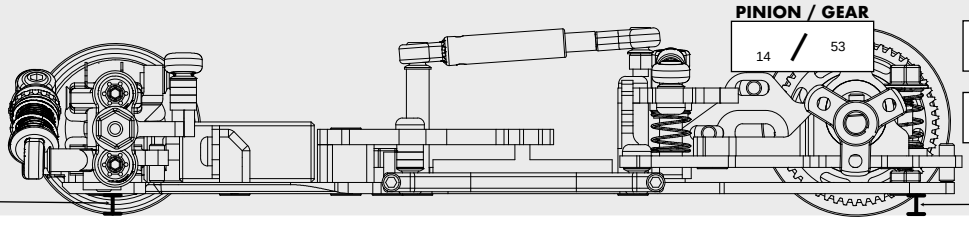

PINION / GEAR: 14 / 53

DIFF TYPE: original — GREASE: Hudy

BALL TYPE: original — LOCK: ☐ soft ☐ med ☐ hard

FRONT HEIGHT: 2 mms — REAR HEIGHT: 2 mms