PNWC 2026 REGIONAL / JERSEY PROMOTIONS

XBILITY RC SET-UP SHEET

XBILITY RC SET-UP SHEET v1.0

NAME: Anthony Colandro | DATE: 3/15/26

QUAL POS.	FINAL POS.	LAPS / TIME	BEST LAPTIME
	6TH A-MAIN	1	8.5

COMMENTS

Very easy to drive / Awesome corner speed.

KYOSHO GREASE 5K & 15K

TRACK

NAME: GTLM SUPER STOCK-LIPO 2500

TRACK SURFACE	☐ CARPET	☒ RCP	
TRACK LAYOUT	☐ TECHNICAL	☐ MIXED	☒ FAST
TRACTION	☐ LOW	☐ MEDIUM	☒ HIGH

BODY

MODEL: PIRANHA | BUMPER:

WING: FORWARD | BODY TYPE:

CHASSIS

☐ ALUM ☐ RX BRASS WEIGHT ☒ STEEL

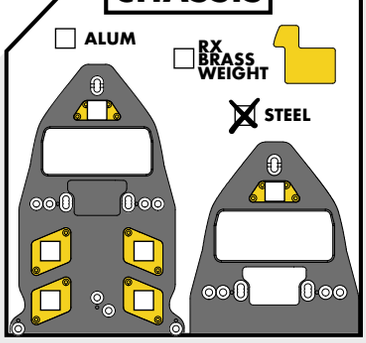

ELECTRONICS

MOTOR: PN V5 2500 | SERVO:

ESC: GL-BLINKY | BATTERY: SPEEDZONE 480

BATTERY POSITION: ☐ FRONT ☐ CENTER ☐ BACK

COMMENTS: •BLINKY WAS FASTER THAN BOOST & TURBO •NO SENSOR WIRE •BATT. 8.40

WEIGHTS

BODY WEIGHT		CAR WEIGHT		TOTAL WEIGHT
24.1 grams	+	grams	=	171 grams

FRONT 84.5 % | WEIGHT DISTRIB. | 87.2% BACK

FRONT TOTAL WIDTH: 75.6 mms

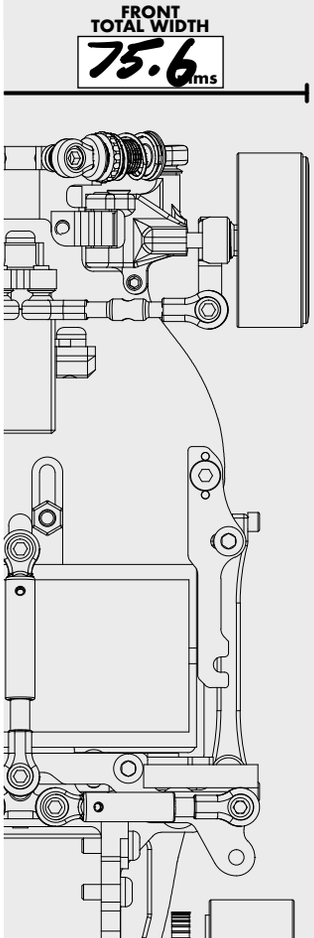

REAR TOTAL WIDTH: 77.6 mms

FRONT

SHIMS: 2 mms | OIL / GREASE: 15K | CASTER: 0 / 1.5 degrees / ☒ 3 | TOE: 1.5 degrees | AXLE TRAIL: 1° mms

HARDER ⟵ SOFTER: ☐ ☐ ☐ ☐ ☒

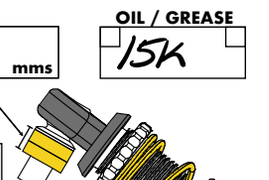

front / top view

DISCS: ☒ 22.4 mms | SIDE GLUE ☐ | NOTHING ☐

TYRE DIAMETER: 22.16 mms KSK40 model

RIM OFFSET: 0-0/SET mms model

DROOP = 0 mms | DOWNSTOP

ACKERMANN: ☒

STEERING DEGREES: degrees

BUMP STEER: 2 mms

CAMBER: 2.5 degrees

HORN ACKERMANN: STOCK mms

HORN TYPE:

FRONT BUCKLE: CAMBER GAIN ☒ | ROLL CENTER ☒

MID

DAMPER / SHOCK: KYOSHO

FRONT SHIMS: 0 mms | OIL / GREASE: 5K | BACK SHIMS: 7 mms

PRE-LOAD SHIMS: 0 mms

LINK SHIMS: 3 mms | MOUNT: ☒ front ☐ back

HARD-MOUNT SHIMS: N/A mms

HARDER ⟵ SOFTER: ☐ ☐ ☒ ☐ ☐

SIDE IN SHIMS: 2 mms | OIL / GREASE: 15K | SIDE OUT SHIMS: 0 mms

SIDE DAMPERS

LINK POSITION: ☒

DAMPER POSITION: ☒

PIVOT MOUNTING POSITION

PIVOT SHIM: 0 / ☒ 1 / 2 mms

REAR

HARDER ⟵ SOFTER: ☐ ☐ ☒ ☐ ☐

DROOP: .6 mms | POD-ANGLE: 2.0 mms

REAR SCREW POSITION: ☒

RIDE HEIGHT ECCENTRIC BUSHINGS

+1	+0,8	+0,6	+0,4	+0,2	0	-0,2	-0,4	-0,6	-0,8	-1
☐	☐	☐	☒	☐	☐	☐	☐	☐	☐	☐

TYRE DIAMETER: 25.45 mms MARKA model | RIM OFFSET: 15 mms 3/0-SET model

PINION / GEAR: 14T

DIFF TYPE: TITANIUM AXLE | GREASE: 1UP PINK

BALL TYPE: XBILITY | LOCK: ☐ soft ☐ med ☒ hard

FRONT HEIGHT: 2.0 mms | REAR HEIGHT: 2.0 mms

