XBILITY RC

SET-UP SHEET

NAME	DATE
Nick 'Zaylee' Szalai	08/18/26

QUAL POS.	FINAL POS.	LAPS / TIME	BEST LAPTIME
		/	

COMMENTS

Tweak set with a bubble level tweak stand to spring back to center after each side is pressed and released. Body posts used instead of body clips. Glued sidewalls, sanded and polished, flush to tire OD as it wears. Aluminum knuckle caps, plastic front shock shafts, titanium ball studs on front arms, steering links, and center pivot, stainless steel pivot balls on side links. -1mm offset front wheels and Xbility rear wheels and axle options were used. Side dampers covered with Ø3.0mm heat shrink tubing, unshrunk and not covering air holes. BHD Hybrid Ceramic bearings used with Yutori oil.

TRACK

NAME: RCHO - 2026 PNNAC

TRACK SURFACE	☐ CARPET	☑ RCP	
TRACK LAYOUT	☐ TECHNICAL	☑ MIXED	☐ FAST
TRACTION	☐ LOW	☑ MEDIUM	☐ HIGH

BODY

MODEL	BUMPER
Piranha	Piranha
WING	**BODY TYPE**
Piranha	GT

CHASSIS

☐ ALUM ☑ RX BRASS WEIGHT ☑ STEEL

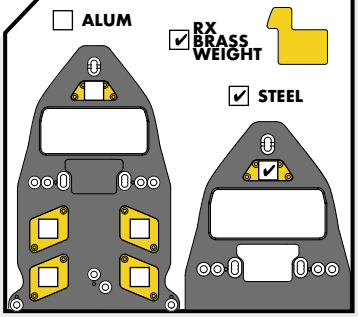

ELECTRONICS

MOTOR	SERVO
Handout	A06CLS V2
ESC	**BATTERY**
Hobbywing	450 mAh

BATTERY POSITION: ☐ FRONT ☑ CENTER ☐ BACK

COMMENTS:

WEIGHTS

BODY WEIGHT		CAR WEIGHT		TOTAL WEIGHT
26 grams	+	151.6 grams	=	177.8 grams

FRONT 50 % WEIGHT DISTRIB. 50 % BACK

FRONT

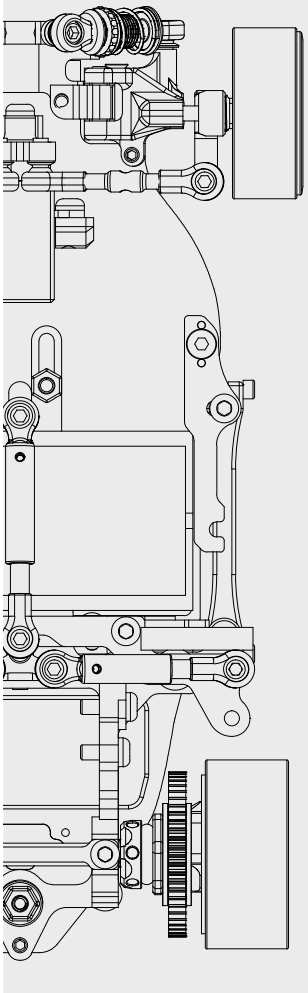

FRONT TOTAL WIDTH: 76 mms

SHIMS: 3 mms

OIL / GREASE: ☐ ☑ Kyosho 15K

CASTER: ☐ 0 ☐ 1.5 ☑ 3 degrees

TOE: 1.5 degrees

AXLE TRAIL: 1.0 mms

SOFTER / HARDER

front / top view

DISCS: ☐ SIDE GLUE ☑ NOTHING mms

TYRE DIAMETER: 22.6 mms KSK40 model

RIM OFFSET: -1 mms PN Mach. Nylon model

DOWNSTOP: .3 mms

ACKERMANN

FRONT BUCKLE

CAMBER GAIN: ☑

ROLL CENTER: ☑

CAMBER: 2 degrees

BUMP STEER: 3 mms

STEERING DEGREES: 30 degrees

HORN ACKERMANN: 0 mms

HORN TYPE: Kit

MID

DAMPER / SHOCK: ☑ Kit ☐

FRONT SHIMS: 0 mms

OIL / GREASE: ☑ 5K

BACK SHIMS: 0 mms

PRE-LOAD SHIMS: 0 mms

LINK SHIMS: 3 mms

MOUNT: ☐ front ☐ back

SOFTER / HARDER

HARD-MOUNT SHIMS: N/A mms

SIDE IN SHIMS: 1 mms

OIL / GREASE: ☑ 15k

SIDE OUT SHIMS: 1 mms

SIDE DAMPERS

LINK POSITION

DAMPER POSITION: ☑

PIVOT MOUNTING POSITION

PIVOT SHIM: 0 ☑ 1 2 mms

REAR

REAR TOTAL WIDTH: 78.50 mms

SOFTER / HARDER

DROOP: .5 mms

POD-ANGLE: 2.0 mms

REAR SCREW POSITION: ☐ ☑ ☐

RIDE HEIGHT ECCENTRIC BUSHINGS

+1	+0,8	+0,6	+0,4	+0,2	0	-0,2	-0,4	-0,6	-0,8	-1
☐	☑	☐	☐	☐	☐	☐	☐	☐	☐	☐

TYRE DIAMETER: 25.5 mms Marka 20 model

RIM OFFSET: +3 mms PN Mach. Nylon model

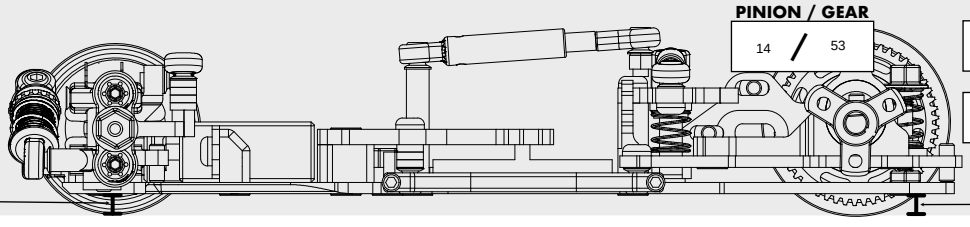

PINION / GEAR: 14 / 53

DIFF TYPE: Ball

GREASE: Kyosho

BALL TYPE: Ceramic

LOCK: ☐ soft ☐ med ☑ hard

FRONT HEIGHT: 2.0 mms

REAR HEIGHT: 2.0 mms