XBILITY RC

SET-UP SHEET

NAME: Clint Thayer | DATE: 8/9/2026

QUAL POS. | FINAL POS. | LAPS / TIME | BEST LAPTIME

COMMENTS

Base setup. Considering increasing camber

TRACK

NAME: MMRC - Madison

TRACK SURFACE	○ CARPET	◉ RCP	
TRACK LAYOUT	◉ TECHNICAL	○ MIXED	○ FAST
TRACTION	○ LOW	◉ MEDIUM	○ HIGH

BODY

MODEL: Piranha | BUMPER: Reflex

WING: Lexan | BODY TYPE: Hardbody

ELECTRONICS

MOTOR: HRC - 2500kv | SERVO: AGFRC

ESC: NHX | BATTERY: Speedzone 480

BATTERY POSITION: ○ FRONT ◉ CENTER ○ BACK

COMMENTS

WEIGHTS

BODY WEIGHT ____ gram + CAR WEIGHT ____ gram = TOTAL WEIGHT 161 gram

FRONT 49 % | WEIGHT DISTRIB. | 59 % BACK

CHASSIS FLEX
BRASS MOUNTING

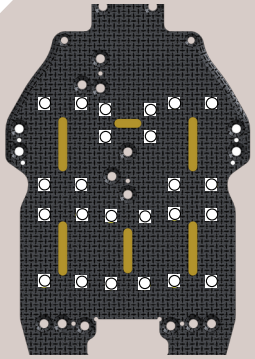

FRONT TOTAL WIDTH: 73 mm

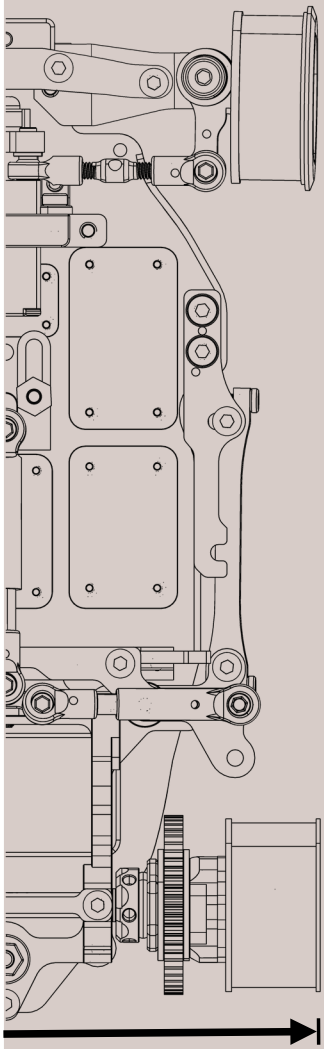

REAR TOTAL WIDTH: 77 mm

FRONT

CAMBER: ○ 0 ○ 1 ◉ 1,5 ○ 2 degrees

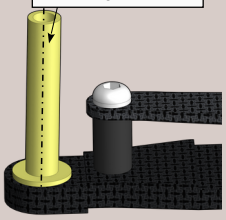

CASTER: ◉ 0 ○ 1.5 degrees ○ 3

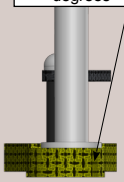

TOE: .5 degrees

AXLE TRAIL: 1 mm

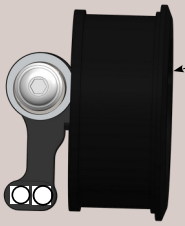

DISCS: ◉ 22.2 mm | SIDE GLUE: ○ | NOTHING: ○

TYRE DIAMETER: 22.4 mm ksk40 model

RIM OFFSET: 0 mm Reflex model

HEIGHT SHIMS: 0 mm

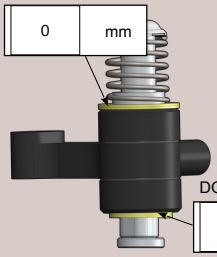

DOWNSTOP: 0 mm

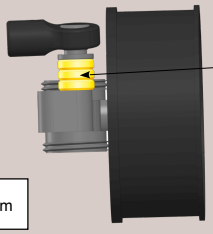

ACKERMANN

BUMP STEER: 2 mm

FRONT TYRE MODEL: ksk40

STEERING DEGREES: ____ degrees

HORN ACKERMANN: ____ mm

HORN TYPE: xbility



MID

DAMPER / SHOCK: ○ ○

FRONT SHIMS: 0 mm

OIL / GREASE: ◉ 10k ○

BACK SHIMS: 0 mm

PRE-LOAD SHIMS: 0 mm

LINK SHIMS: 3 mm

MOUNT: front ○ ○ back

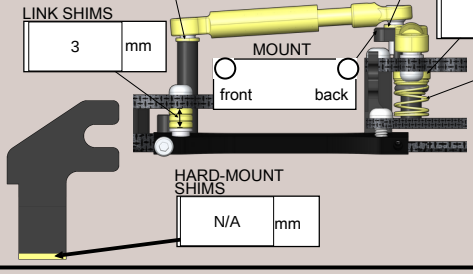

SOFTER / HARDER

HARD-MOUNT SHIMS: N/A mm

SIDE IN SHIMS: 0 mm | OIL / GREASE: ◉ 8k ○ | SIDE OUT SHIMS: 0 mm

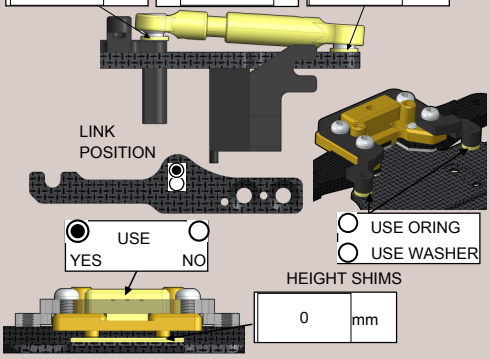

LINK POSITION

USE: ○ YES ○ NO

○ USE ORING
○ USE WASHER

HEIGHT SHIMS: 0 mm

REAR

SOFTER / HARDER

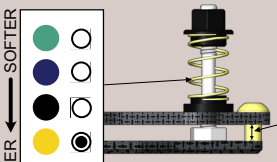

DROOP: .2 mm

POD-ANGLE: 1.5 mm

RIDE HEIGHT ECCENTRIC BUSHINGS

+1	+0,8	+0,6	+0,4	+0,2	0	-0,2	-0,4	-0,6	-0,8	-1
○	○	○	○	○	◉	○	○	○	○	○

TYRE DIAMETER: ____ mm RR15 model

RIM OFFSET: 3 mm xbility model

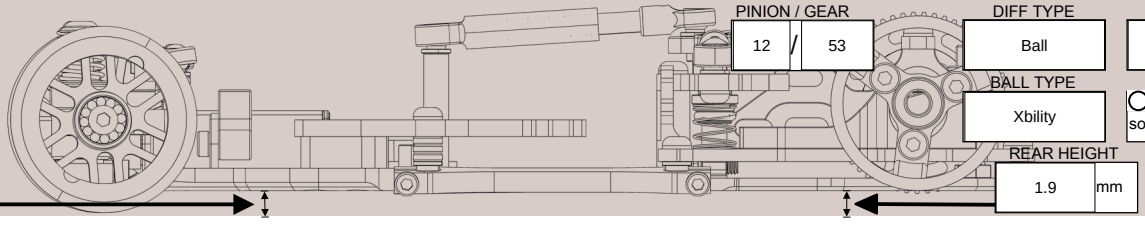

PINION / GEAR: 12 / 53

DIFF TYPE: Ball | GREASE: atomic

BALL TYPE: Xbility | LOCK: ○ soft ○ med ◉ hard

FRONT HEIGHT: 1.9 mm

REAR HEIGHT: 1.9 mm