XPRESS EXECUTE XQIIR SET-UP SHEET

Driver	chau man	Track Surface				Track Temperature	
Date	2025.11.02	Track Traction		Result	2	Air Temperature	
Track	TRC	Country		Best Lap	16.0	Humidity	Remark

Front

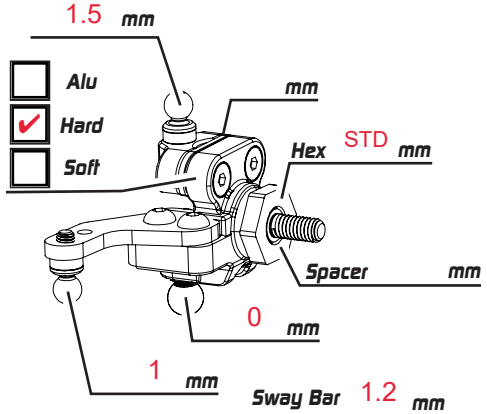

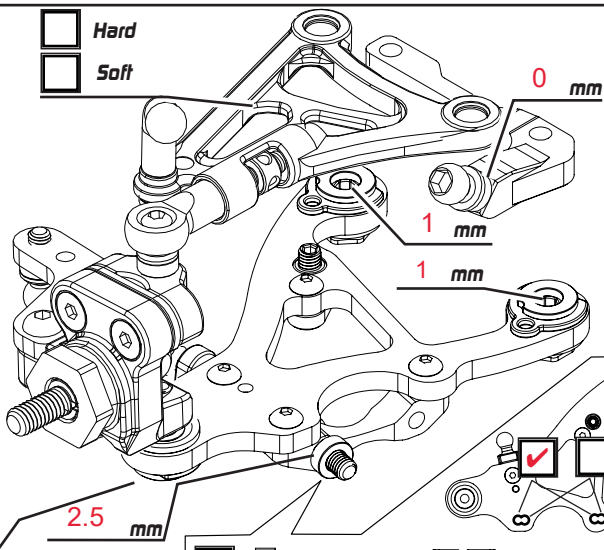

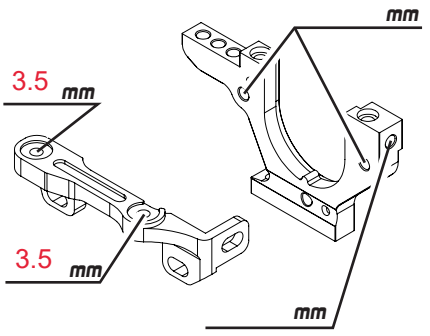

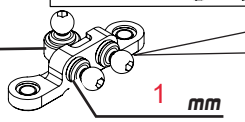

Ride Height	4.8 mm	Sway Bar	1.2 mm	Outer	mm
Toe	1.5	Camber	2	Steering	25
Spool	☑	Downstop	23.4 mm	8.0 ☐ 8.5 ☐ 9.0	☑
High Diff	☑	Gear Diff	☐	Remark	
Low Diff	☐	Cst			
		Weight			

Shocks

Spring	xpress2.5-2.8
Oil	450
Rebound	0
Piston	4x1.3
Length	
Note	

Rear

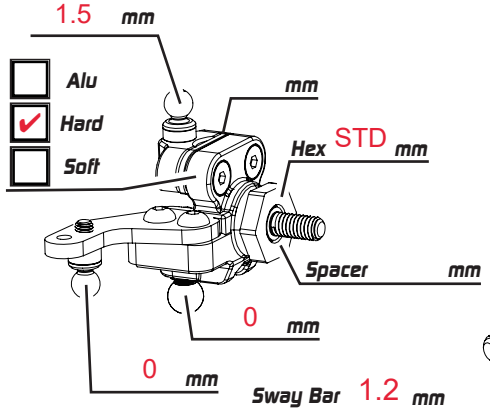

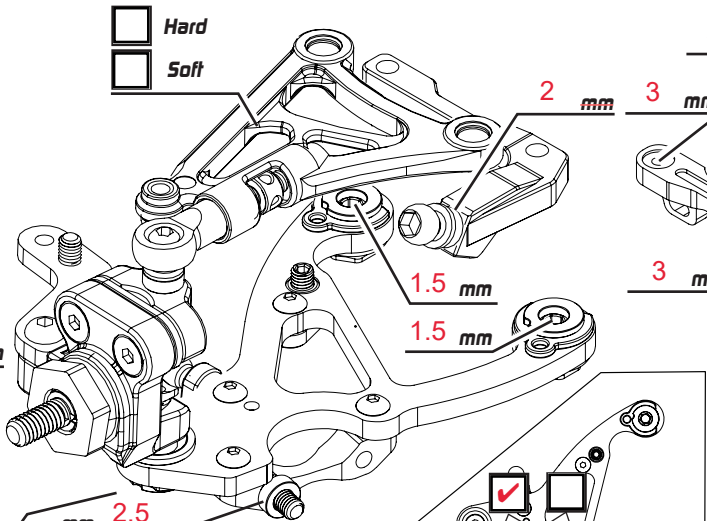

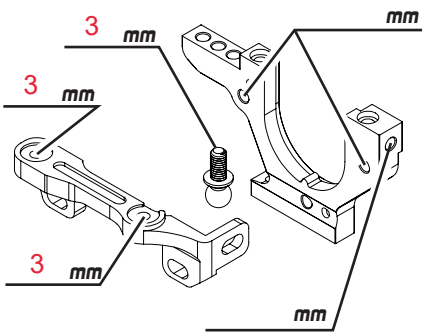

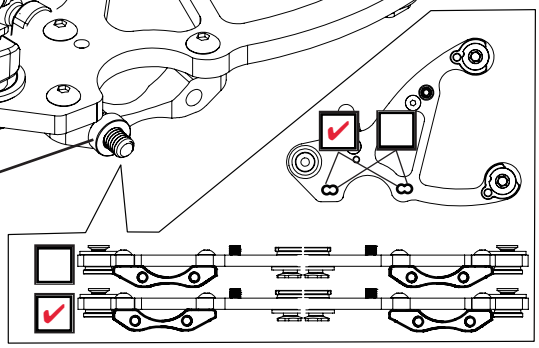

Ride Height	5.2 mm	Sway Bar	1.2 mm	
Toe	3	Camber	2	
		Downstop	22.8 mm	
		Gear Diff		
High Diff	☑	Cst	8000	
Low Diff	☐	Weight	1.4	

Remark

Shocks

Spring	Xpress2.7
Oil	450
Rebound	0
Piston	4x1.3
Length	
Note	

Weight	g	Battery		Body		Weight	g
		Tires		Additive		Carbon	☐
						Alu	☑
		ESC	orca	Motor	17.5	Servo Horn Height	17 mm
Weight	g			Spur	64 P/ 90 T	Servo	gts-2
				Pinon	64 P/ 45 T	FDR	3.80
						Weight	g

