XPRESS EXECUTE XQIIRR — SET-UP SHEET

Driver	Eric Lam	**Track Surface**		**Track Temperature**	
Date	2026/3/22	**Track Traction**	Medium	**Result**	A2	**Air Temperature**	
Track	TRC	**Country**	HongKong	**Best Lap**		**Humidity**		**Remark**	

Front

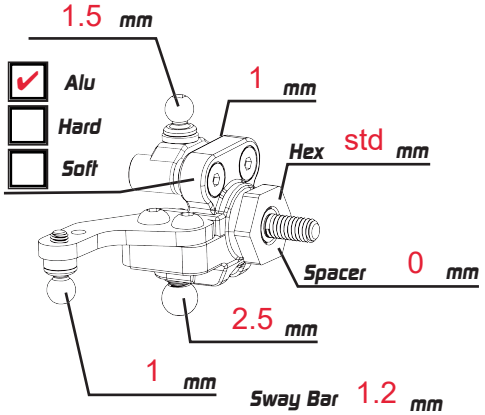

- [x] Alu
- [ ] Hard
- [ ] Soft

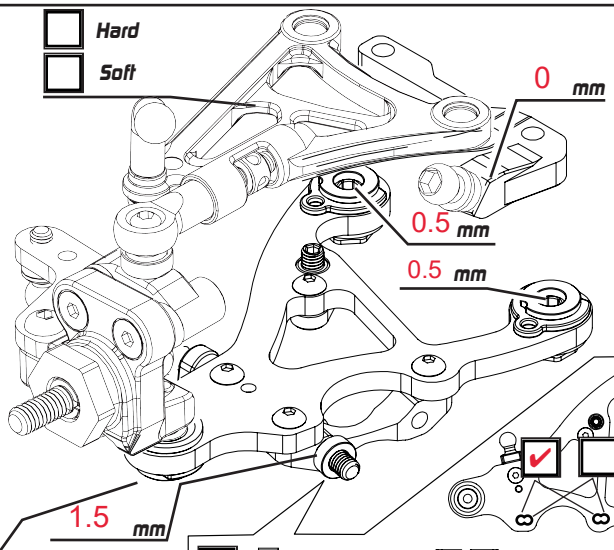

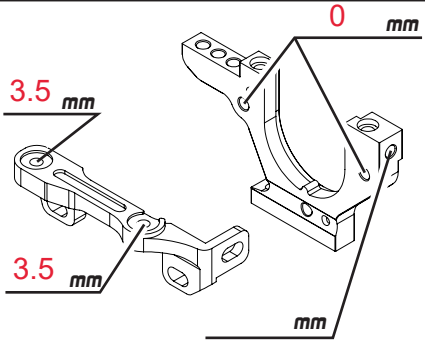

Ride Height	5 mm	Sway Bar	1.2 mm
Toe	1	Camber	2
		Downstop	23.4 mm
		Gear Diff	
		Cst	
		Weight	
Outer	mm	Steering	26

- [x] Spool
- [x] High Diff
- [ ] Low Diff

- [x] 8.0 [ ] 8.5 [ ] 9.0

Remark

Shocks

Spring	2.7
Oil	325
Rebound	25%
Piston	4 x 1.1
Length	8.5
Note	caster 4

Rear

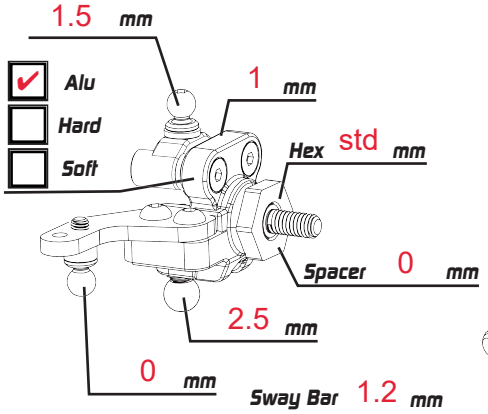

- [x] Alu
- [ ] Hard
- [ ] Soft

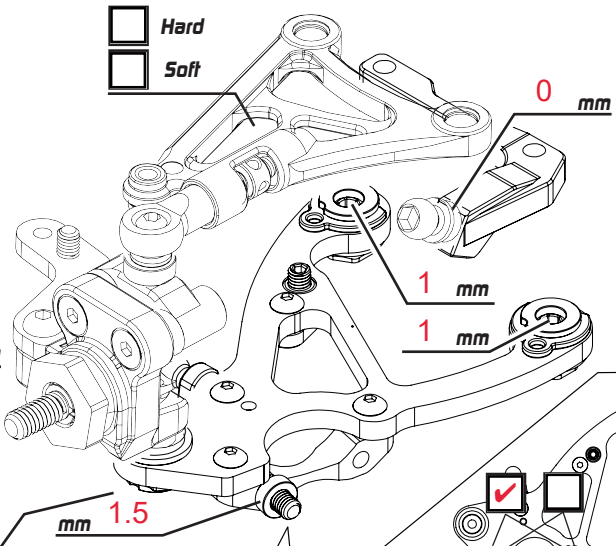

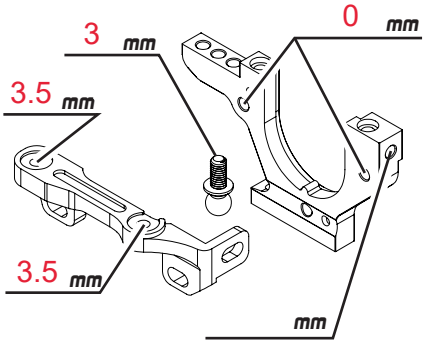

Ride Height	5.4 mm	Sway Bar	1.2 mm
Toe	3	Camber	2
		Downstop	22.4 mm
		Gear Diff	
		Cst	7000
		Weight	1.4

- [x] High Diff
- [ ] Low Diff

Remark

Shocks

Spring	2.8
Oil	350
Rebound	25%
Piston	4 x 1.1
Length	8.5
Note	caster 2

Weight g

Battery ONI 6500 Body MTB0415UL

Tires handout rush Additive v3 yellow

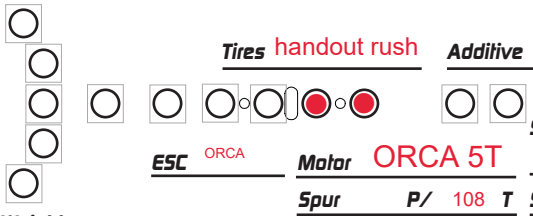

Servo Horn Height mm

ESC ORCA Motor ORCA 5T

Spur P/ 108 T Servo GTS2

Pinon P/ 29 T FDR 7.08

Weight g

Weight 10 g

- [ ] Carbon
- [x] Alu

Weight 10 g

