XPRESS EXECUTE XQIIRR SET-UP SHEET

Driver	Yugo Nagashima	Track Surface	Indoor Carpet	Track Temperature			
Date	2026/7/19	Track Traction	Low	Result		Air Temperature	
Track	RC Maniax	Country		Best Lap		Humidity	Remark

Front

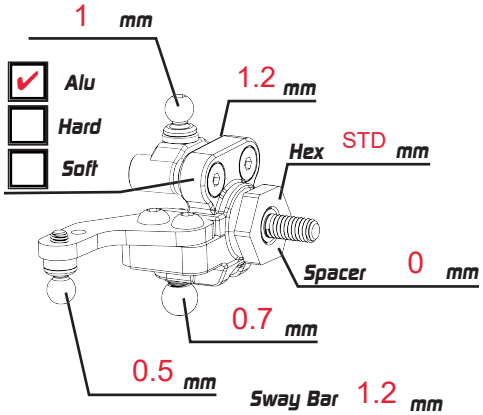

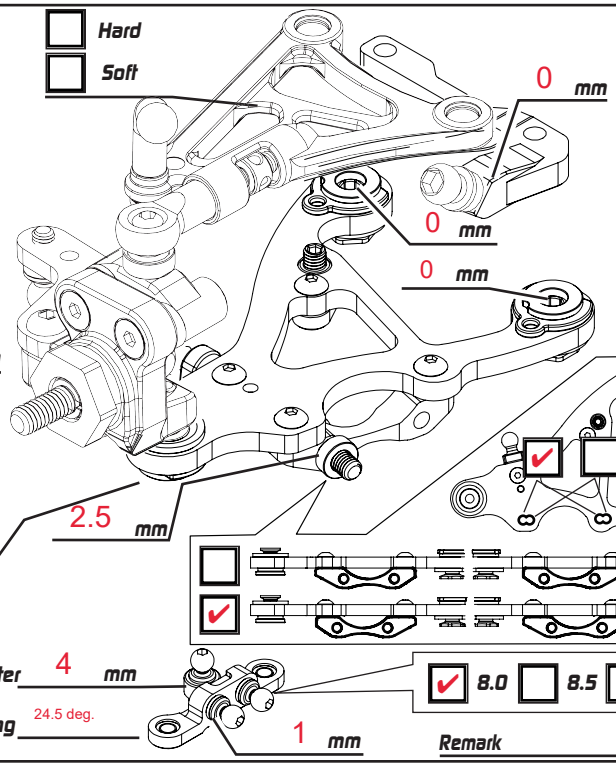

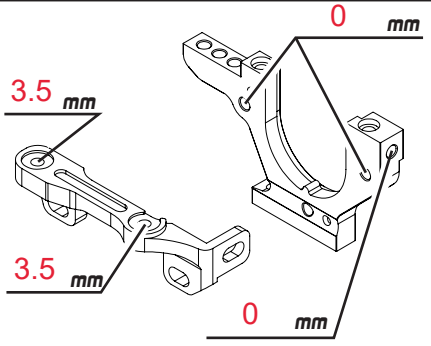

Ride Height 5 mm | Sway Bar 1.2 mm
Toe -1 | Camber 1.5
Downstop 23 mm
Spool | Gear Diff
High Diff | Cst
Low Diff | Weight
Outer 4 mm
Steering 24.5 deg.
8.0 | 8.5 | 9.0
Remark

Shocks

Spring	Xpress
Oil	32.5
Rebound	3mm
Piston	1.1 4 hole
Length	8mm
Note	

Rear

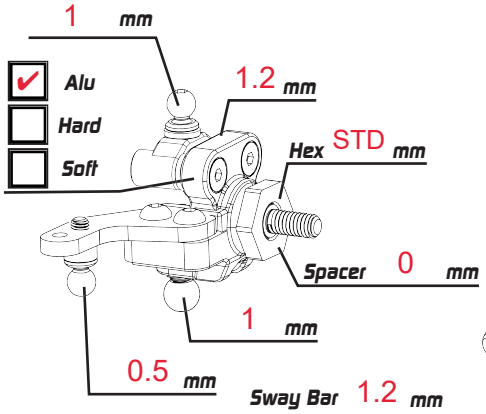

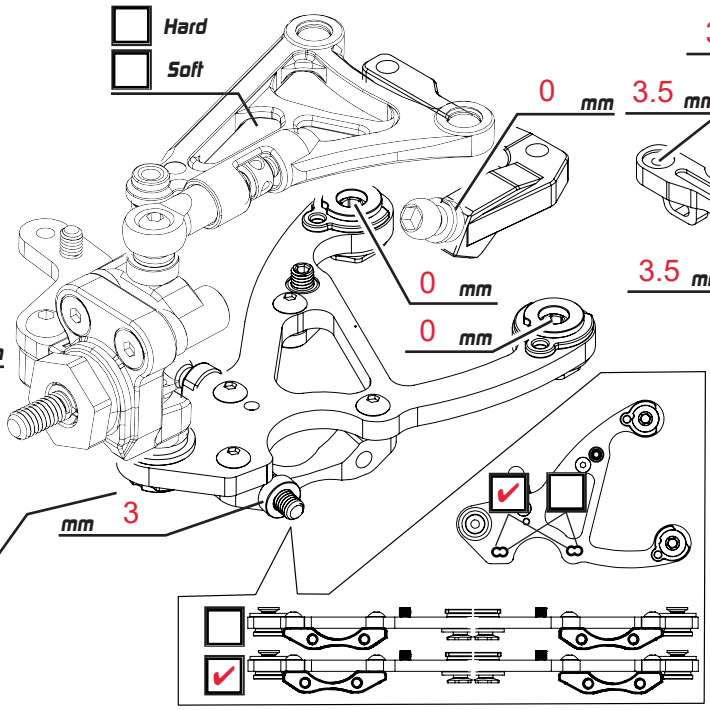

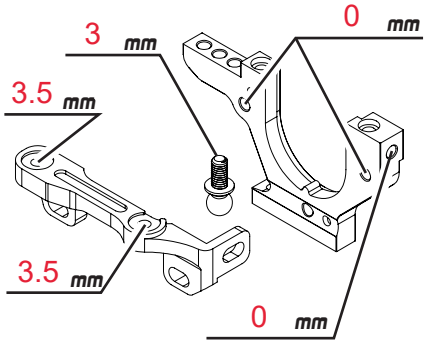

Ride Height 5.4 mm | Sway Bar 1.2 mm
Toe 2.5 | Camber 2.0
Downstop 22 mm
Gear Diff
High Diff | Cst 7500
Low Diff | Weight 1.4
Remark

Shocks

Spring	Xpress 2.7
Oil	32.5
Rebound	3mm
Piston	1.1 4hole
Length	8mm
Note	

Weight g
Battery SKT 5000mAh | Body Blitz Pista
Tires 28cpx | Additive
ESC | Motor | Servo Horn Height 17mm mm
Spur P/ T | Servo GTS-2
Pinon P/ T | FDR NaN
Weight g

Weight 5 g
Carbon
Alu
Weight 5 g

